AL FAROOQ
IRON MERCHANT

THE ULTIMATE HOUSE OF BUILDING MATERIAL WITH THE BIGGEST RANGE!

HEAD OFFICE
Office No: 102-104 Green Market
Syed Mehmood Shah Road near Lee Market, Karachi, Pakistan
UAN: 021 11-11-234-11

SALES OFFICE
Suite No: 503/504,
Balad Trade Centre
Bahadurabad, Karachi Pakistan
Ph: 021 34899991-4

FACTORY
Plot No. 1230-MB/05-A,
Ittehad Town Industrial Area,
Karachi, Pakistan
Ph: 021 32380041-3

info@alfarooqiron.com

www.alfarooqiron.com

sales@alfarooqiron.com

AL FAROOQ
IRON MERCHANT

STOCKIST & DEALER

AMRELI STEELS

ISL International Steels Limited
Shaping Tomorrow

AGHA STEEL INDUSTRIES
Defining Quality

PAKISTAN STEEL

NSS NEW SHALIMAR STEEL INDUSTRIES (PVT) LTD

ASG
ABBAS STEEL GROUP
structuring tomorrow

Muhammad Farooq Jaffrani

C.E.O | AL FAROOQ IRON MERCHANT

AL FAROOQ IRON MERCHANT
THE ULTIMATE HOUSE OF BUILDING MATERIAL WITH THE BIGGEST RANGE!

MESSAGE BY CEO

I offer my deep gratitude to all our valuable customers, who time to time trust us and gave us a chance to serve them. Let me acknowledge the support and suggestions of our valued customers, which made us able to strengthen our foundations and to stand in the first row of steel manufacturers and traders of our nation.

Al Farooq Iron Merchant striving hard to provide best quality steel products to the customers all over the country and abroad.

We are committed to make every improvements in our product range by using latest technology and research and also trying to provide best quality standards in the production capacity.We are positive to provide quality products of international standards to our valued customers.

AL FAROOQ IRON MERCHANT

THE ULTIMATE HOUSE OF BUILDING MATERIAL WITH THE BIGGEST RANGE!

WHO WE ARE?

In the year 1955, Haji Abdul Jaffrani (*late*) established a company in Karachi, dealing in timber business. By the year 1985, the business was transformed from timber to iron & steel.

Over the years the business experienced a Blistering growth, by the grace of Almighty Allah; today the company excels and shines with the name of "**AL FAROOQ IRON MERCHANT**"(AFIM).

AFIM has a vision to provide superior quality products at the best price to its customers, with outstanding customers service on continuous and long term basis. Being the market leader, over years we have succeeded to be the most admired and trusted company in Pakistan. **AFIM** is committed to continuous growth and challenges itself, to be the most prominent and preferred Brand of Pakistan; Our Moto:

"The Ultimate House of Building Material with The Biggest Range"

AFIM has its own state of the art manufacturing facility of featured steel products located in Karachi, with the annual production capacity of 45,000 Metric Tons.

AFIM specializes in manufacturing and supplying premium quallity building materials of various categories; including De-formed Bars (G-60 & G-40) MS I-Beam, MS & GI Sheets, MS Angles, MS Channels, etc.

AL FAROOQ
IRON MERCHANT
THE ULTIMATE HOUSE OF BUILDING MATERIAL WITH THE BIGGEST RANGE!

VISION & MISSION

Our vision is to provide prime quality products to our customers while remaining the market leader and striving to be the most admired company of the nation.

Our mission is to provide prime quality products at very low price to our customers with outstanding customer services on day to day basis. We are also committed to the growth of "Al Farooq Iron Merchant" and challenge ourselves to be the best in industry.

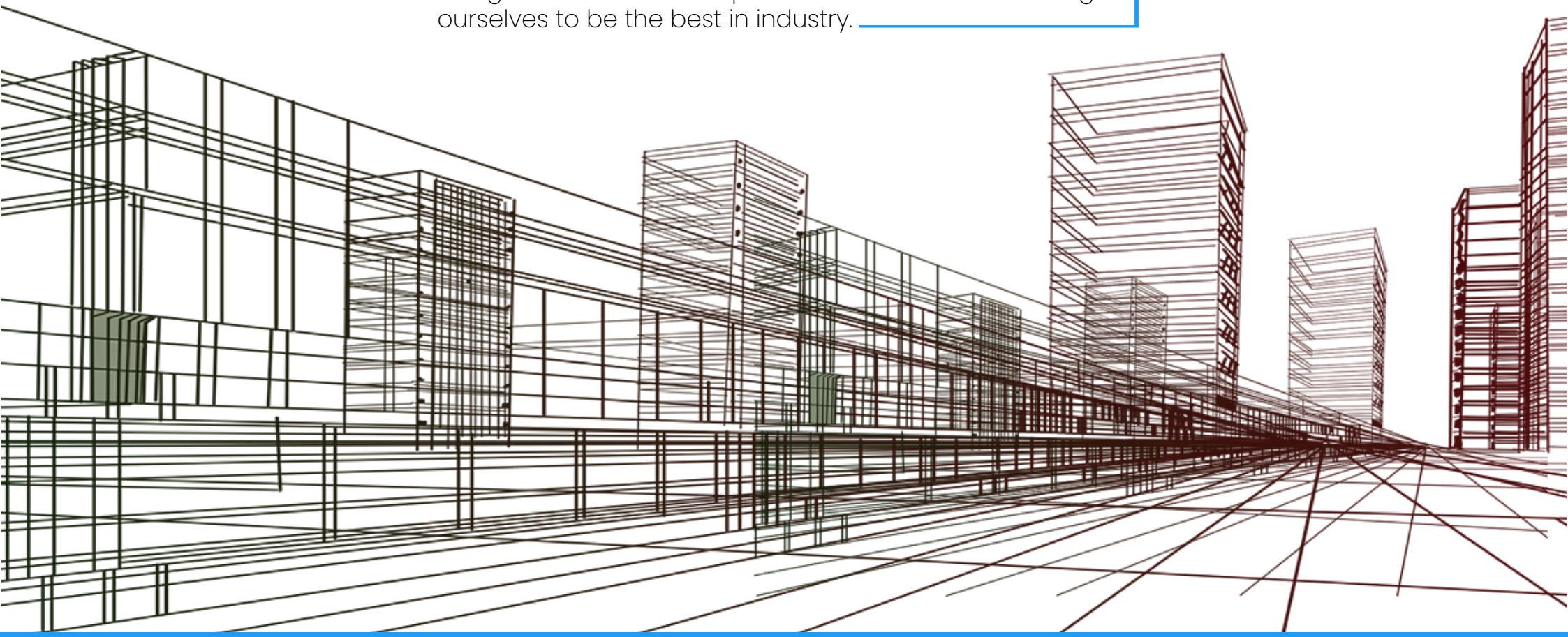

AL FAROOQ IRON MERCHANT
THE ULTIMATE HOUSE OF BUILDING MATERIAL WITH THE BIGGEST RANGE!

Barbed Wire

Also referred to as barb or bobbed wire. This is a type of fencing wire that has sharp projection or edges and is used in the development of fences.

The barbed wires are used for covering the walls of buildings and houses to provide ultimate protection and security.

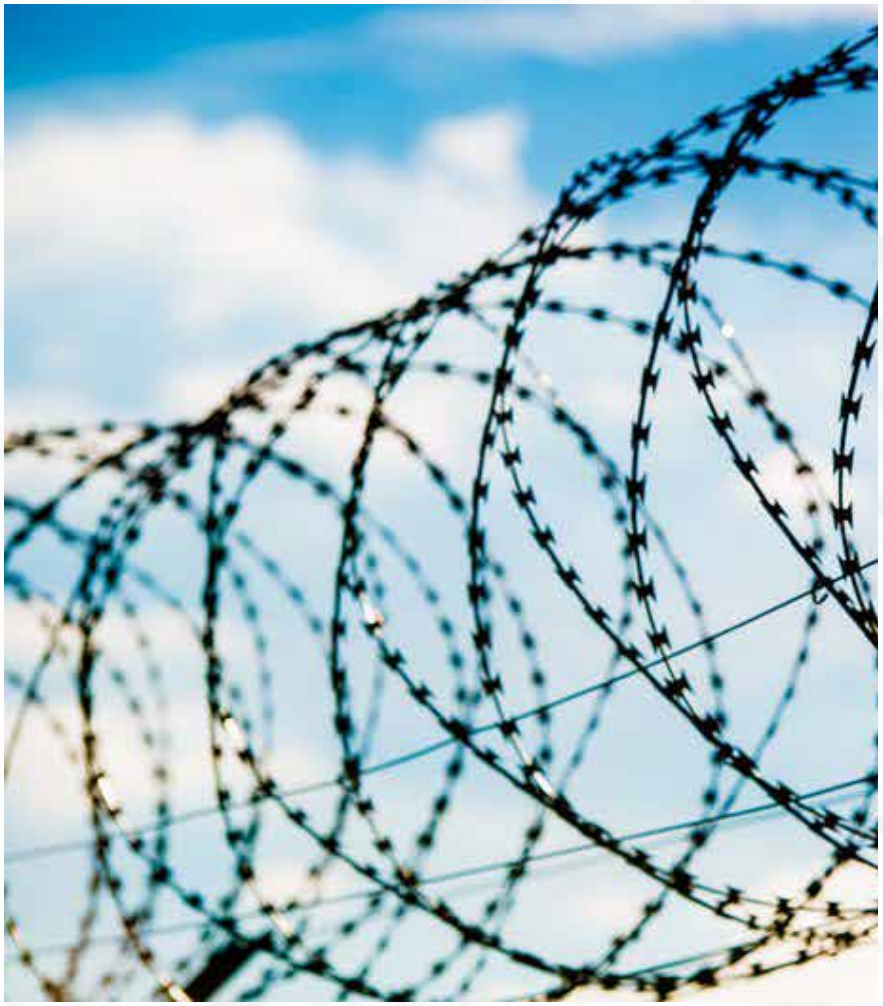

BARBED WIRE SPECIFICATION

Type	Wire Gauge (SWG)		Barb Distance (cm)	Barb Length (cm)
Electric Galvanized Barbed Wire/ Hot-dip Zinc Plated Barbed Wire	10 # x 12 #		7.5-15	1.5-3
	12 # x 12 #			
	12 # x 14 #			
	14 # x 14 #			
	14 # x 16 #			
	16 # x 16 #			
	16 # x 18 #			
	Before Coating	After Coating		
PVC Barbed Wire: PE Barbed Wire	1.0mm 3.5mm	1.4mm 4.0mm	7.5-15	1.5-3
	BWG 11#-20#	BWG 8#-17#		
	SWG 11#-20#	SWG 8#-17#		

RAZOR BARBED WIRE SPECIFICATION

Outside Diameter	No. of Loops	St. Length Per Coil	Type	Notes
450mm	56	8-9M	3(CLIPS)	BTO -10.12.18.22.28.30
500mm	56	9-10M	3(CLIPS)	BTO -10.12.18.22.28.30
600mm	56	10-11M	3(CLIPS)	BTO -10.12.18.22.28.30
600mm	56	8-10M	5(CLIPS)	BTO -10.12.18.22.28.30
700mm	56	10-12M	5(CLIPS)	BTO -10.12.18.22.28.30
800mm	56	11-13M	5(CLIPS)	BTO -10.12.18.22.28.30
900mm	56	12-14M	5(CLIPS)	BTO -10.12.18.22.28.30
960mm	56	13-15M	5(CLIPS)	BTO -10.12.18.22.28.30
980mm	56	14-16M	5(CLIPS)	BTO -10.12.18.22.28.30

AL FAROOQ
IRON MERCHANT
THE ULTIMATE HOUSE OF BUILDING MATERIAL WITH THE BIGGEST RANGE!

A T bar is also made with authentic steel and comprises a small crosspiece as it also holds an end piece at the edge.

The T iron is also used in fabrication and construction industries by manufacturers.

T-IRON

T-IRON	
Dimension A x B	**Unit Weight**
mm	Kg/Rft
45 x 20	0.500
49 x 24	0.600
50 x 25	0.700
50 x 28	0.800
51 x 30	0.900
52 x 34	1.000
53 x 08	1.100
53 x 02	1.200
54 x 45	1.500

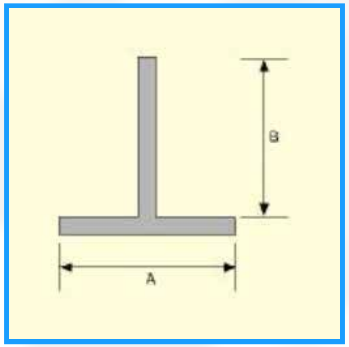

AL FAROOQ IRON MERCHANT
THE ULTIMATE HOUSE OF BUILDING MATERIAL WITH THE BIGGEST RANGE!

GIRDER

This is in the form of a horizontal platform which in return provides a supporting framework to small beams. This is also used in the construction of bridges or heavy pieces of machinery.

While the feature girt is in the form of a longitudinal girder which resists the forces of sheer to prevent deformation.

GIRDER	
Dimension A x B	**Unit Weight**
Inches	Kg/Rft
4-1/2 x 2	1.170
5 x 3	1.300
6 x 4	1.500
6 x 4	1.850
7 x 4	1.950
7 x 4	2.250
6 x 3	2.300
6 x 3	2.900
8 x 4	2.500
8 x 4	2.900
8 x 4	3.250
8 x 4	3.800
8 x 4	5.000

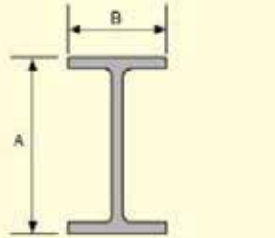

AL FAROOQ IRON MERCHANT
THE ULTIMATE HOUSE OF BUILDING MATERIAL WITH THE BIGGEST RANGE!

These bars are created through steel billets and are composed or filled with less carbon in them. Every bar is twisted coldly and these have an elastic limit that crosses the limit of steel.

These cold bars went through procedures of twisting and are also used in the construction industry.

COLD TWISTED BAR

MECHANICAL PROPERTIES (COLD TWISTED BAR)

Diameter or Dimension of (inch)	Cross Section Are (Sq.Inch)	Gauge Length (inch)	Yield/Proof Load (Ton)	Yield/Proof Strength (Lbs/Sq.inches)	Braeking Load (Tons)	Ultimate Tensile Strength (Lbs/Sq.inches)	Elongation (inches)	Elongation (%)
3/8″	0.1369	2.0″	3.4	55631.8	4.5	73620.3	0.46	23.0
1/2″	0.1825	2.5″	5.0	61639.8	6.6	81008.2	0.52	20.8
5/8″	0.2623	3.0″	7.3	62340.8	9.5	81128.4	0.62	20.6
3/4″	0.4618	3.5″	12.5	60632.3	16.0	77609.3	0.74	21.1
7/8″	0.5914	4.0″	15.7	59465.6	20.1	76131.2	0.82	20.5
1″	0.7645	4.5″	21.0	61530.4	27.2	79696.0	0.90	20.0

COLD TWISTED BAR

Product Specification

Diameter (inch)	Meter/ Kg	Feet/ Kg
3/8″	1.894	6.061
7/16″	1.447	4.630
1/2″	1.096	3.509
5/8″	0.702	2.247
3/4″	0.473	1.515
7/8″	0.351	1.124
1″	0.267	0.853

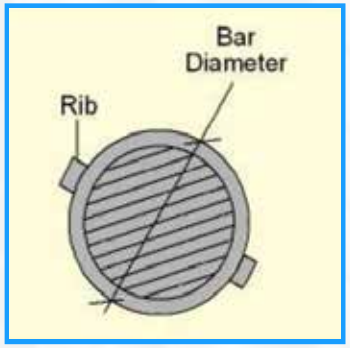

AL FAROOQ IRON MERCHANT
THE ULTIMATE HOUSE OF BUILDING MATERIAL WITH THE BIGGEST RANGE!

The plain round bars are circular shape-wise and the most famous example is the SS round bar. The plain bars can resist corrosion and rust.

The plain round bars are involved in the fabrication of machinery & fasteners with ease.

PLAIN ROUND BAR

PLAIN ROUND BAR				
Size	Weight/Rft	Weigth/Meter	Feet/Ton	Meter/Ton
6mm+	0.070kg	0.228kg	14286	4396
10mm	0.170kg	0.557kg	5882	1796
12mm	0.270kg	0.878kg	3704	1140
14mm	0.367kg	1.193kg	2725	838
16mm	0.480kg	1.560kg	2083	641
18mm	0.608kg	1.976kg	1645	506
20mm	0.750kg	2.438kg	1333	410
22mm	0.910kg	2.958kg	1099	338
24mm	1.080kg	3.510kg	926	285
27mm	1.368kg	4.446kg	731	225
30mm	1.680kg	5.460kg	595	183
34mm	2.169kg	7.049kg	461	142
38mm	2.700kg	8.775kg	370	114
40mm	3.000kg	9.750kg	333	103
42mm	3.310kg	10.758kg	302	93
53mm	5.270kg	17.128kg	190	58
60mm	6.750kg	21.938kg	148	46
65mm	7.928kg	25.766kg	126	39
70mm	9.190kg	29.968kg	109	33
75mm	10.550kg	34.288kg	95	29
78mm	11.400kg	37.050kg	88	27
90mm	15.190kg	49.368kg	66	20
101mm	19.130kg	62.173kg	52	16
110mm	22.700kg	73.775kg	44	14
130mm	31.700kg	103.025kg	32	10
140mm	36.770kg	119.503kg	27	8
152mm	43.770kg	141.830kg	23	7
165mm	51.200kg	166.400kg	20	6
178mm	59.380kg	192.985kg	17	5

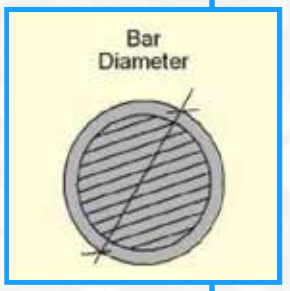

AL FAROOQ IRON MERCHANT
THE ULTIMATE HOUSE OF BUILDING MATERIAL WITH THE BIGGEST RANGE!

Square bars as the name implicates are in the form of a square with its height, width and length are of the same dimensions.

A square bar is commonly used in the construction industry. And also used in the fabrication of pieces of machinery and heavy pieces of equipment.

SQUARE BAR

SQUARE BAR				
Size	Weight/Rft	Weigth/Meter	Feet/Ton	Meter/Ton
9mm	0.154kg	0.500kg	600	2000
10mm	0.225kg	0.730kg	4452	1370
11mm	0.292kg	0.950kg	3421	1053
12mm	0.348kg	1.130kg	2876	885
14mm	0.474kg	1.540	2110	649
16mm	0.618kg	2.010kg	1617	498
18mm	0.782kg	2.540kg	1280	394
20mm	0.966kg	3.140kg	1035	318
22mm	1.169kg	3.800kg	855	263
25mm	1.511kg	4.910kg	662	204
28mm	1.892kg	6.150kg	528	163
32mm	2.474kg	8.040kg	404	124
36mm	3.129kg	10.170kg	320	98
40mm	3.865kg	12.560kg	259	80
45mm	4.892kg	15.900kg	204	63
50mm	6.037kg	19.620kg	266	51
56mm	7.575kg	24.620kg	132	41
63mm	9.588kg	31.160kg	104	32
71mm	12.175kg	39.570kg	82	25
80mm	15.458kg	50.249kg	65	20

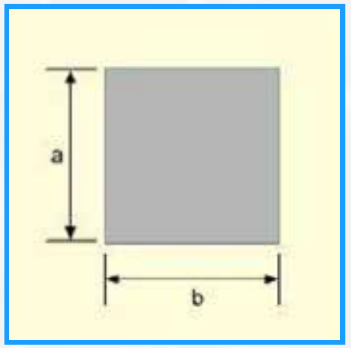

AL FAROOQ IRON MERCHANT
THE ULTIMATE HOUSE OF BUILDING MATERIAL WITH THE BIGGEST RANGE!

M.S FLAT BAR

M.S. FLAT BAR				
Dimension				Unit Weight
Inches		mm		
a	b	a	b	Kg/Mtr
1/2″	1/8″	12.5	3.0	0.377
	3/16″		4.5	0.472
3/4″	1/8″	20.0	3.0	0.475
	3/16″		4.5	0.711
	1/4″		6.0	0.947
1″	1/8″	25	3.0	0.626
	3/16″		4.5	0.947
	1/4″		6.0	1.262
	3/8″		10.0	1.905
1-1/4″	1/8″	30	3.0	0.790
	3/16″		4.5	1.187
	1/4″		6.0	1.577
	3/8″		10.0	2.368
1-1/2″	1/8″	38	3.0	0.954
	3/16″		4.5	1.193
	1/4″		6.0	1.915
	3/8″		10.0	2.870
	1/2″		12.5	3.827
2″	1/8″	50	3.0	1.262
	3/16″		4.5	1.905
	1/4″		6.0	2.528
	5/16″		8.0	3.191
	3/8″		10.0	3.791
	1/2″		12.5	5.106
	5/8″		16.0	6.382
	3/4″		20.0	7.658

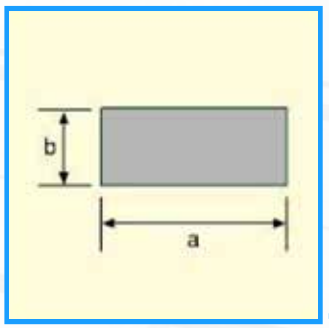

M.S. FLAT BAR				
Dimension				Unit Weight
Inches		mm		
a	b	a	b	Kg/Mtr
2-1/2″	3/16″	65	4.5	2.394
	1/4″		6.0	3.191
	8/8″		10.0	4.788
	1/2″		12.5	6.328
	5/8″		16.0	7.980
	3/4″		20.0	9.574
	1″		25.4	12.785
3″	1/4″	75	6.0	5.477
	3/8″		10.0	5.740
	1/2″		12.5	7.658
	5/8″		16.0	9.574
	3/4″		20.0	11.489
	1″		25.4	15.317
4″	1/4″	100	6.0	5.106
	5/16″		8.0	6.232
	3/8″		10.0	7.658
	1/2″		12.5	10.200
	5/8″		16.0	12.647
	3/4″		20.0	15.176
	1″		25.4	20.240
5″	1/4″	125	6.0	6.327
	3/8″		10.0	9.495
	1/2″		12.5	12.650
	5/8″		16.0	15.822
	3/4″		20.0	18.974
6″	3/8″	150	10.0	18.368
	1/2″		12.5	21.799
	1″		25.4	28.732

AL FAROOQ
IRON MERCHANT
THE ULTIMATE HOUSE OF BUILDING MATERIAL WITH THE BIGGEST RANGE!

G.I. SHEET

G.I SHEET			
CALCULATED WEIGHT			
Thichness		4FT x 8FT 1219mm x 2438mm	1metre x 8Ft 1000mm x 2438mm
Gauge(g)	(mm)	Weight/Sheet	Weight/Sheet
10	3.180mm	74.176kg	60.268kg
11	2.830mm	66.016kg	53.638kg
12	2.520mm	58.752kg	47.736kg
13	2.240mm	52.352kg	42.536kg
14	1.990mm	46.528kg	37.04kg
15	1.770mm	41.440kg	33.670kg
16	1.590mm	37.091kg	30.136kg
18	1.260mm	29.381kg	23.872kg
20	1.000mm	23.272kg	18.909kg
21	0.890mm	20.653kg	16.781kg
22	0.790mm	18.472kg	15.009kg
23	0.710mm	16.436kg	13.354kg
24	0.630mm	14.691kg	11.936kg
25	0.560mm	13.079kg	10.626kg
26	0.500mm	11.636kg	9.454kg
27	0.440mm	10.357kg	8.415kg
28	0.400mm	9.267kg	7.529kg
29	0.350mm	8.248kg	6.702kg
30	0.310mm	7.303kg	5.933kg
31	0.280mm	6.533kg	5.308kg
32	0.250mm	5.491kg	4.461kg
33	0.220mm	5.163kg	4.195kg
34	0.200mm	4.569kg	3.713kg
35	0.180mm	4.103kg	3.333kg
36	0.150mm	3.624kg	2.945kg

AL FAROOQ IRON MERCHANT
THE ULTIMATE HOUSE OF BUILDING MATERIAL WITH THE BIGGEST RANGE!

These are also referred to as hot checkered steel plates. The sheets are involved in merging in a surface over a surface of steel sheet using the roll pressing technique.

These are present in the diamond, oblate, and round bean form, and their pattern is found over the superficial surface only. As the backside is flat.

M.S.CHECKERED SHEET

TEAR DROP

MILD STEEL SHEET						
Designation	RHOMBUS 4FT x 8FT 1219mm x 2438mm			TEAR DROP 4FT x 8FT 1219mm x 2438mm		
Thickness (mm)	Kg/Sq.Mtr	Kg/pc	Sheets/ M.ton	Kg/Sq.Mtr	Kg/pc	Sheets/ M.ton
2.5	21.6	64.21	15.5	21.1	62.72	15.9
3.0	25.6	76.10	13.1	24.3	72.24	13.8
3.5	29.5	87.70	11.4	28.3	84.13	11.8
4.0	33.4	99.29	10.0	32.3	96.02	10.4
4.5	37.3	110.88	9.0	36.2	107.61	9.2
5.0	42.3	125.75	7.9	40.2	119.51	8.3
5.5	46.2	137.34	7.2	44.1	131.10	7.6
6.0	50.1	148.94	6.7	4.1	142.99	6.9
7.0	59.0	175.40	5.7	52.4	155.77	6.4
8.0	66.8	198.58	5.0	56.2	167.07	5.9

RHOMBUS

AL FAROOQ
IRON MERCHANT
THE ULTIMATE HOUSE OF BUILDING MATERIAL WITH THE BIGGEST RANGE!

M.S. SHEET

The M.S sheets are composed of pure steel and have a thickness of 1 to2mm. The M.S sheets can be molded into coils or can be used as sheets.
M.s sheets are readily accessible in all shapes, sizes, and weights. And these sheets are used in the construction of security doors, automotive bodywork, and decoration purposes.

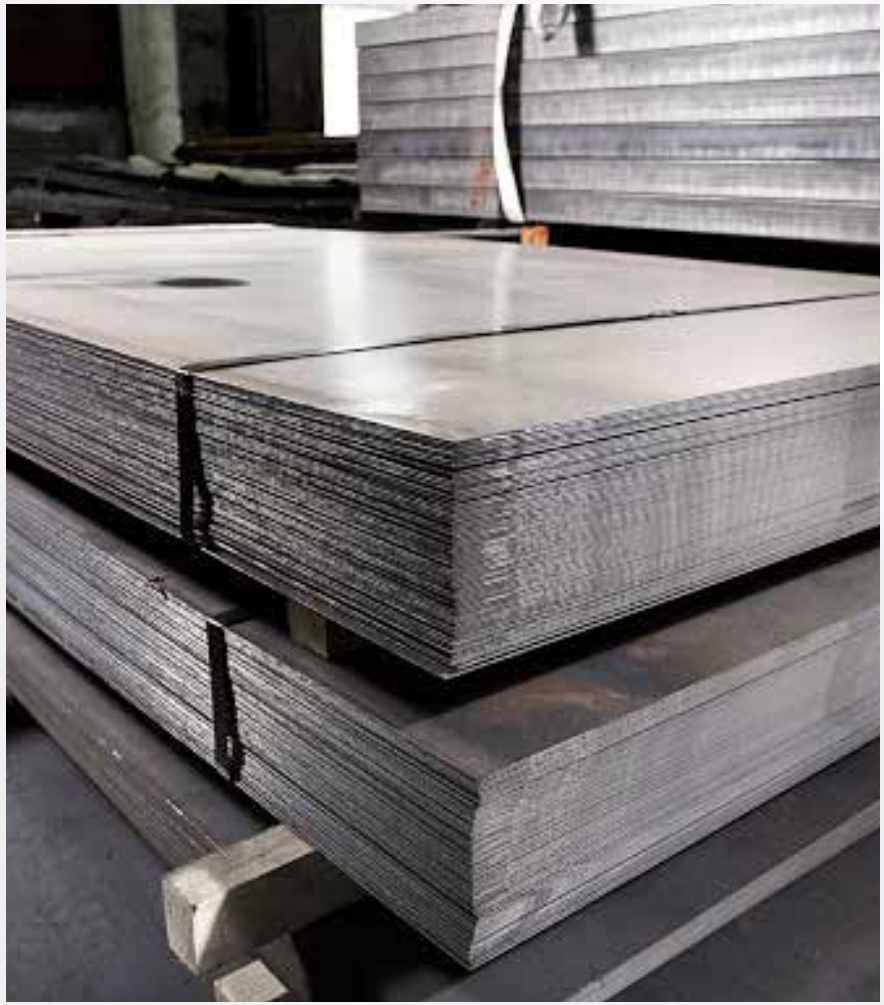

MILD STEEL SHEET

CALCULATED WEIGHT

Designation		4FT x 8FT 1219mm x 2438mm		5FT x 10FT 1524mm x 3048mm		5Ft x 20Ft 1524mm x 6096mm	
Thickness (mm)	Kg/Sq.Mtr	Kg/pc	Sheets/ M.ton	Kg/Pc	Sheets/ M.ton	Kg/Pc	Sheets/ M.ton
0.9	6.94	20.653	48.4	32.270	30.9	64.540	15.4
1.0	7.83	23.272	42.9	36.362	27.5	72.725	13.7
1.1	8.76	26.036	38.4	40.681	24.5	81.362	12.2
1.2	9.88	29.381	34.0	45.907	21.7	91.815	10.8
1.4	30.28	33.017	30.2	51.589	19.3	103.178	9.6
1.5	26.96	37.019	26.9	57.954	17.2	115.909	8.6
1.7	13.96	41.440	24.1	64.750	15.4	129.500	7.7
1.9	15.65	46.582	21.4	72.700	13.7	145.400	6.8
2.2	17.61	52.352	19.1	81.800	12.2	163.600	6.1
2.5	19.76	58.752	17.0	91.850	10.8	183.600	5.4
2.8	22.20	66.016	15.1	103.150	9.6	206.300	4.8
3.0	25.25	75.069	13.3	117.336	8.5	234.590	4.2
4.5	37.02	110.063	9.1	172.033	5.8	344.066	2.9
6.0	48.79	145.058	6.9	226.730	4.4	453.460	2.2
7.5	60.56	180.052	5.6	281.426	3.6	562.852	1.7
8.0	64.48	191.717	5.2	299.659	3.3	599.318	1.6
9.0	72.33	215.046	4.7	336.123	3.0	672.246	1.4
10.0	80.18	238.376	4.2	372.587	2.7	745.174	1.3
11.0	88.03	261.705	3.8	409.052	2.4	818.104	1.2
12.0	95.87	285.035	3.5	445.516	2.2	891.032	1.1
13.0	103.72	308.365	3.2	481.981	2.1	963.962	1.0
14.0	111.57	331.694	3.0	518.445	1.9	1036.890	1.2
15.0	112.69	355.024	2.8	554.910	1.8	1109.829	1.0
16.0	127.25	378.353	2.6	591.374	1.7	1182.748	0.90
20.0	152.14	470.000	21	734.375	1.3	1468.750	0.85
25.0	201.38	600.000	1.6	937.500	1.0	1875.000	0.50

AL FAROOQ IRON MERCHANT
THE ULTIMATE HOUSE OF BUILDING MATERIAL WITH THE BIGGEST RANGE!

A deformed bar is a long bar that is made up of 100% authentic steel and has specific outcrops or projecting ridges covering it which serves to increase the strength of the deformed bar.

Well in simplest form these steel bars are deformed and their main purpose is to eliminate slippage from the tangible concrete surface and assist in increasing the bond between the materials. The deformed bars have excessive tensile stresses.

DEFORMED BAR

DEFORMED BAR			
Product Specification			
Bar Size/ mm	**Area/mm²**	**Meter/Kg**	**Feet/Kg**
10mm	78.57	1.613	5.319
12mm	113.14	1.124	3.690
16mm	201.14	0.633	2.075
20mm	314.29	0.405	1.330
22mm	380.29	0.334	1.099
25mm	491.07	0.259	0.850
28mm	616.00	0.207	0.678
32mm	804.57	0.158	0.519
36mm	1018.29	0.125	0.410
40mm	1257.14	0.101	0.332

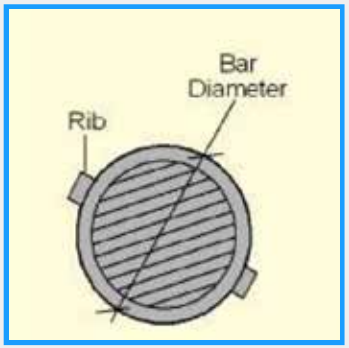

AL FAROOQ IRON MERCHANT
THE ULTIMATE HOUSE OF BUILDING MATERIAL WITH THE BIGGEST RANGE!

A wide flange is also involved in the beam category and it is commonly used in construction and mechanical area. The wide flange also resembles the shape of the alphabet H and as the name suggests the wide flange has a great cross-sectional area as compared to the I beam and a wide flange can tolerate a greater amount of load as compared to other beams.

Wide flanges ate also used in the construction of bridges and buildings.

WIDE FLANGE SHAPE

WIDE SECTION						
Designation	Unit Weight		Dept of Section	Flange		Web Thickness
			(H)	Width(B)	Thichness(E)	(S)
Inches	Lbs/Ft	Kg/Mtr	mm	mm	mm	mm
100x100	11.5	17.2	100	100	6.0	8.0
125x125	15.9	23..8	125	125	6.5	9.0
150x150	21.1	31.5	150	150	7.0	10.0
175x175	27.0	40.2	175	175	7.5	11.0
200x200	33.5	49.2	200	200	8.0	12.0
	37.7	56.2	200	204	12.0	12.0
	44.1	65.7	208	202	10.0	16.0
250x250	43.2	64.4	244	252	11.0	11.0
	44.6	66.5	248	249	8.0	13.0
	48.6	72.4	250	250	14.0	14.0
	55.2	82.2	250	255	14.0	14.0
300x300	56.7	84.5	294	302	12.0	12.0
	58.4	87.0	296	296	9.0	14.0
	63.0	94.0	300	300	10.0	15.0
	71.2	106	300	305	15.0	15.0
	71.2	106	304	301	11.0	17.0
350x350	71.2	106	338	351	13.0	13.0
	77.2	115	344	348	10.0	16.0
	88.0	131	344	354	16.0	16.0
	92.0	137	350	350	12.0	19.0
	104.8	156	350	357	19.0	19.0
	106.8	159	356	352	14.0	22.0

AL FAROOQ
IRON MERCHANT
THE ULTIMATE HOUSE OF BUILDING MATERIAL WITH THE BIGGEST RANGE!

A wide flange is also involved in the beam category and it is commonly used in construction and mechanical area. The wide flange also resembles the shape of the alphabet H and as the name suggests the wide flange has a great cross-sectional area as compared to the I beam and a wide flange can tolerate a greater amount of load as compared to other beams.

Wide flanges ate also used in the construction of bridges and buildings.

WIDE FLANGE SHAPE

WIDE SECTION						
Designation	Unit Weight		Dept of Section	Flange		Web Thickness
			(H)	Width(B)	Thichness(E)	(S)
Inches	Lbs/Ft	Kg/Mtr	mm	mm	mm	mm
400x400	94.0	140.0	388	402	15.0	15.0
	98.7	147.0	394	398	11.0	18.0
	112.8	168.0	394	405	18.0	18.0
	115.5	172.0	400	400	13.0	21.0
	132.3	197.0	400	408	21.0	21.0
	134.3	200.0	406	403	16.0	24.0
	155.8	232.0	414	405	18.0	28.0
	190.1	283.0	428	407	20.0	35.0
	278.8	415.0	458	417	30.0	50.0
	406.5	605.0	498	450	70.0	22.0
450x300	71.2	106.0	434	299	10.0	15.0
	83.3	124.0	440	300	11.0	18.0
500x200	53.4	79.5	496	199	9.0	14.0
	60.2	89.6	500	200	10.0	16.0
	69.2	103.0	506	201	11.0	19.0
600x200	63.5	94.6	596	199	10.0	15.0
	71.2	106.0	600	200	11.0	17.0
	80.6	120.0	606	201	12.0	20.0
	90.0	134.0	612	202	13.0	23.0

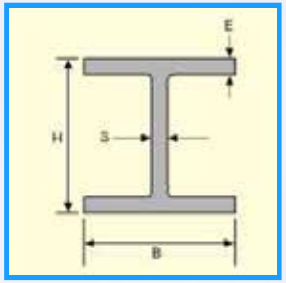

AL FAROOQ
IRON MERCHANT
THE ULTIMATE HOUSE OF BUILDING MATERIAL WITH THE BIGGEST RANGE!

The I beam is also referred to as the H beam but with a specific difference. The I beam has tapered or more horizontal flanges or edges. The I beam is often used in the construction of buildings to provide the structure its ultimate support and to assist trusses.

I beam has exceptional quality for directing the web towards unidirectional meandering which is parallel to the web. The I beam can resist the bending movements to avoid distress.

I BEAM

I BEAM					
Designation	Unit Weight	Dept of Section	Flange		Web Thickness
		(H)	Width(B)	Thichness(E)	(S)
Inches	Kg/Mtr	mm	mm	mm	mm
80x42	5.9	80	42	5.9	3.9
100x50	8.3	100	50	6.8	4.5
120x58	11.1	120	58	7.7	5.1
160x74	17.9	160	74	9.5	6.3
180x82	21.9	180	82	10.4	6.9
200x90	26.2	200	90	11.3	7.5
220x98	31.1	220	98	12.2	8.1
240x106	36.2	240	106	13.1	8.7
260x113	41.9	260	113	14.1	9.4
300x125	54.2	300	125	16.2	10.8
340x137	68.0	340	137	18.3	12.2
360x143	76.1	360	143	19.5	13.0
400x155	92.4	400	155	21.6	14.4
450x170	115.0	450	170	24.3	16.2
500x185	141.0	500	185	27.0	18.0
550x200	167.0	550	200	30.0	19.0
600x215	199.0	600	215	32.4	21.6

AL FAROOQ
IRON MERCHANT
THE ULTIMATE HOUSE OF BUILDING MATERIAL WITH THE BIGGEST RANGE!

This stands for Microwave sounding unit. The MSU was founded in the year 1978 and covers all the world. The msu has a 4 radiator channel which has the potential to operate within 50-60 GHz.
The meteorological department investigates the use of MSU and investigates the weather around the world. Either MSU is used solely or it is used in combination with two basic infrared instruments.

M.S. EQUAL ANGEL

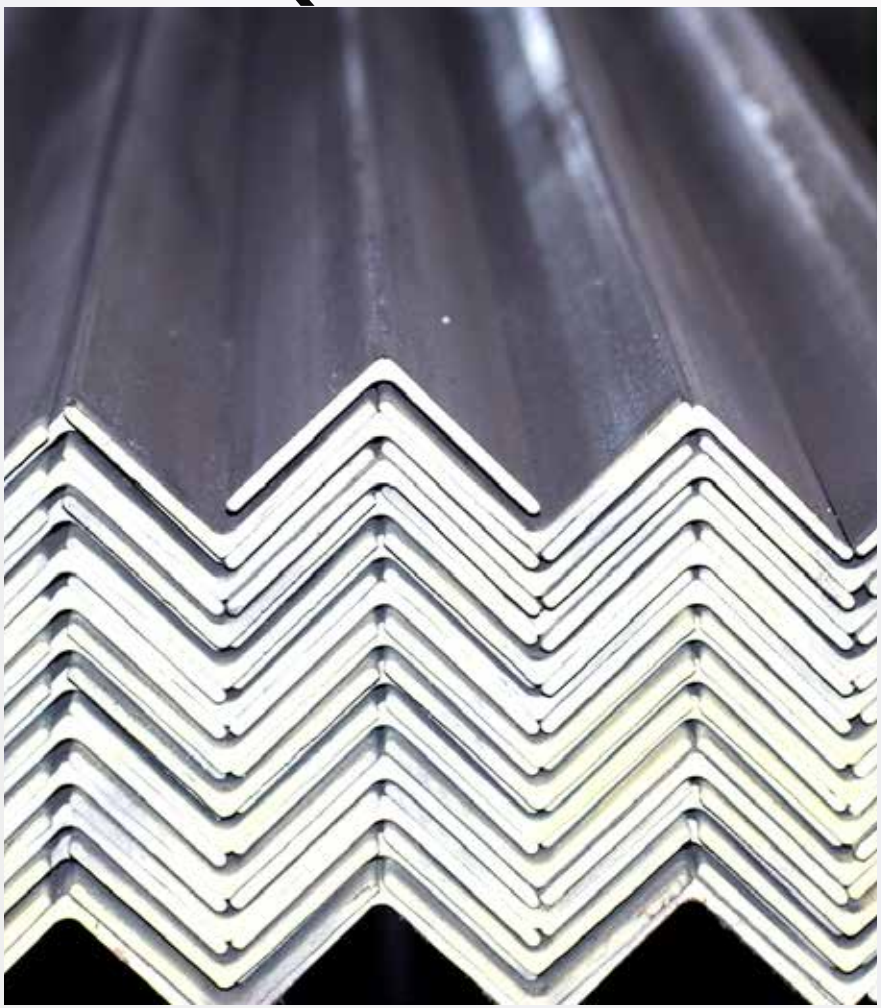

M.S. EQUAL ANGEL				
Dimension A X B		Thickness		Unit weight
Inches	mm	Inches	mm	Kg/Mtr
3/4"x3/4"	6.2x6.2	1/8"	3.0	0.852
1"x1"	25x25	1/8"	3.0	1.187
		3/16"	4.5	1.725
1-1/4"x1-1/4"	30x30	1/8"	3.0	1.515
		3/16"	4.5	2.184
		1/4"	6.0	2.856
1-1/2"x1-1/2"	38x38	1/8"	3.0	1.830
		3/16"	4.5	2.663
		1/4"	6.0	3.480
2" x 2"	50x50	1/8"	3.0	2.453
		3/16"	4.5	3.614
		1/4"	6.0	3.746
		3/8"	10.0	7.199
2-1/2"x2-1/2"	65x65	3/16"	4.5	3.138
		1/4"	6.0	6.012
		5/16"	8.0	7.396
		3/8"	10.0	8.764
		1/2"	12.5	11.384
3"x3"	75x75	3/16"	4.5	5.822
		1/4"	6.0	7.291
		5/16"	8.0	9.003
		3/8"	10.0	10.682
		1/2"	12.5	13.926
3-1/2"x3-1/2"	88x88	1/4"	6.0	9.083
		5/16"	8.0	10.578
		3/8"	10.0	12.572

M.S. EQUAL ANGEL				
Dimension A X B		Thickness		Unit weight
Inches	mm	Inches	mm	Kg/Mtr
4"x4"	100x100	1/4"	6.0	9.708
		5/16"	8.0	12.004
		3/8"	10.0	14.268
		1/2"	12.5	18.696
4-1/2"x4-1/2"	115x115	5/16"	8.0	13.612
		3/8"	10.0	16.186
		1/2"	12.5	21.270
		5/8"	16.0	26.190
5" x 5"	125x125	5/16"	8.0	15.088
		3/8"	10.0	18.040
		7/16"	11.0	20.926
		1/2"	12.5	23.845
		5/8"	16.0	29.192
		3/4"	20.0	34.718
6" x 6"	150x150	5/16"	8.0	18.368
		3/8"	10.0	21.779
		1/2"	12.5	28.732
		5/8"	16.0	35.588
		3/4"	20.0	42.213
7" x 7"	177x177	3/8"	10.0	25.584
		1/2"	12.5	33.784
		5/8"	16.0	41.820
		3/4"	20.0	49.741
		1"	15.4	65.075
8" x8"	200x200	1/2"	12.5	38.759
		5/8"	16.0	4.084
		3/4"	20.0	57.236
		1"	25.4	74.849

AL FAROOQ IRON MERCHANT
THE ULTIMATE HOUSE OF BUILDING MATERIAL WITH THE BIGGEST RANGE!

The H beam takes its name as it is in the form of the alphabet H. The word HM refers to the H beam which exhibits the height and width ratio of the overhang and is commonly used in steel assembly.

The H beam is used in the construction of large buildings or bridges and due to the exceptionally wide and different cross-sectional areas the H beam can withstand greater load as compared to the I beam.

H BEAM

H BEAM					
Designation	Unit Weight	Dept of Section (H)	Width of Section (B)	Web Thickness (S)	Thickness Flange (T)
Inches	Kg/Mtr	mm	mm	mm	mm
152x152	23.0	152.4	152.2	5.8	6.8
	30.0	157.6	152.9	6.5	9.4
	37.0	161.8	154.4	8.0	11.5
203x203	46.1	203.2	203.6	7.2	11.0
	52.0	206.2	204.3	7.9	12.5
	60.0	209.6	205.8	9.4	14.2
	71.0	215.8	206.4	10.0	17.3
	86.1	222.2	209.1	12.7	20.5
254x254	73.1	254.1	254.6	8.6	14.2
	88.9	260.3	256.3	10.3	17.3
	107.1	266.7	258.8	12.8	20.5
	132.0	276.9	261.3	15.3	25.5
	167.1	289.1	265.2	19.2	31.7
305x305	96.9	307.9	305.3	9.9	15.4
	117.9	314.5	307.4	12.0	18.7
	136.9	320.5	309.2	13.8	21.7
	158.1	327.1	3112	15.8	25.0
356x368	129.0	362.2	370.5	12.3	20.7
	152.9	362.0	370.5	12.3	20.7
	177.0	368.0	372.2	14.4	23.8
	201.9	374.6	374.7	16.5	27.0

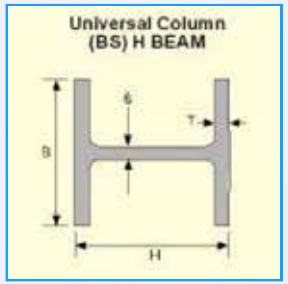

AL FAROOQ IRON MERCHANT
THE ULTIMATE HOUSE OF BUILDING MATERIAL WITH THE BIGGEST RANGE!

This stands for Microwave sounding unit. The MSU was founded in the year 1978 and covers all the world. The msu has a 4 radiator channel which has the potential to operate within 50-60 GHz.

The meteorological department investigates the use of MSU and investigates the weather around the world. Either MSU is used solely or it is used in combination with two basic infrared instruments.

M.S.U CHANNEL

M.S.U CHANNEL						
Designation		Dimension(mm)			Unit Weigth	
Inches	Catagory	AxB	T3	T2	(Kg/Rft)	(Kg/Mtr)
3X1-1/2	(L.W)	75x38	4.0	5.20	1.50	4.92
	(H.W)	75x38	6.0	6.70	2.20	7.21
4X2	(L.W)	100x50	5.0	6.30	2.40	7.87
	(H.W)	100x50	6.0	6.80	3.20	10.49
5X2-1/2	(L.W)	125x65	5.1	7.30	3.60	11.80
	(H.W)	125x65	6.1	8.50	4.20	13.77
6X3	(L.W)	150x75	6.0	7.70	4.50	15.08
	(H.W)	150x75	8.0	10.20	6.30	20.66
6-1/4X2-1/2	(IMP)	160x65	7.5	10.50	5.73	18.80
7X3	(L.W)	180x70	6.0	7.10	4.90	16.072
	(H.W)	180x70	8.0	10.10	6.70	21.97
7X2-1/2	(IMP)	80x70	8.0	11.00	6.70	22.00
8X3	(L.W)	200x75	6.0	8.70	6.00	19.68
	(H.W)	200x75	8.0	11.50	8.20	26.89
	(IMP)	200x75	8.5	11.50	7.71	25.30
8-5/8X3-1/8	(STD)	220x80	9.5	10.80	8.70	28.53
8-1/2X3-1/4	(STD)	220x80	9.0	12.50	8.96	29.40
9-1/2X3-1/2	(IMP)	24085	9.5	13.00	10.00	33.20
10X3	(L.W)	250x75	8.0	10.00	8.50	27.80
10X3-1/2	(STD)	250x90	9.5	12.50	10.00	32.80
	(IMP)	260x90	10.0	14.00	11.50	37.90
12X4	(STD)	300x100	10.0	14.80	14.30	46.90
	(IMP)	300x100	10.0	16.00	14.08	46.20

UPN (European Standard)
&
JIS (Japanese Standard)

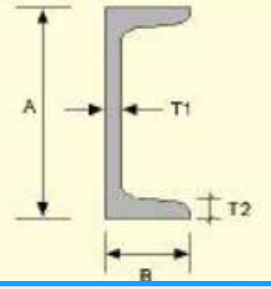

AL FAROOQ
IRON MERCHANT

info@alfarooqiron.com
www.alfarooqiron.com
sales@alfarooqiron.com